P1796-B
I-beam clamp S83

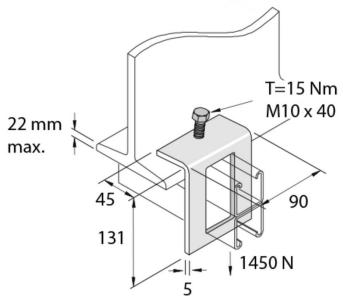

Reference	Finish	↕ mm	↔ mm	→‖← mm	⇄ mm	kg/stk	⬡	Unit
P1796-B	HG	132	45		90	0,591	10	STK

Abbreviation:
- HG = Hot-Dip Galvanised

Legend finish
- HG = Hot-dip galvanised