P1386-S1
J46 Profile clamp

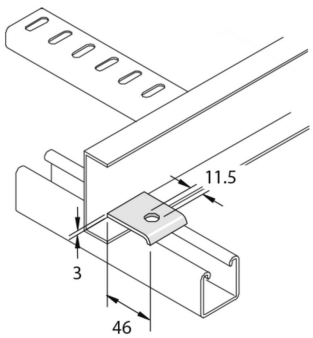

Reference	Finish	↕ mm	↔ mm	→‖← mm	⇄ mm	kg/stk	📦	Unit
P1386-S1	ZP				46	0,044	20	STK

Abbreviation:
- ZP = Zinc Plated

Legend finish
- ZP = Zinc plated