P1218-P1219

21x2.5 Channel Coupler

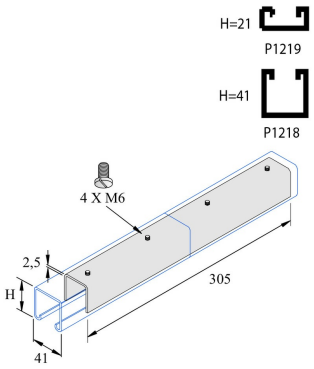

Reference	Finish	↕ mm	↔ mm	→‖← mm	⇄ mm	kg/stk	📦	Unit
P1218	ZP	41	41		305	0,564	10	STK
P1219	ZP	21	41		305	0,297	20	STK

Abbreviation:
- ZP = Zinc Plated

Legend finish
- ZP = Zinc plated