VN

Special Ceiling Mounting System

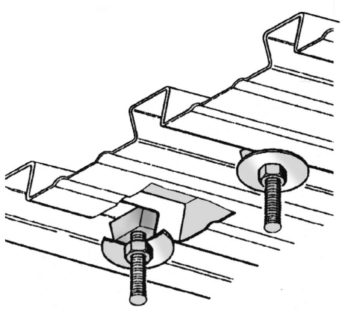

Reference	↕ mm	↔ mm	→‖← mm	⇄ mm	kg/stk		Unit
VN10	13	13		25	0,018	100	STK