SDBG
Steeldeck bracket

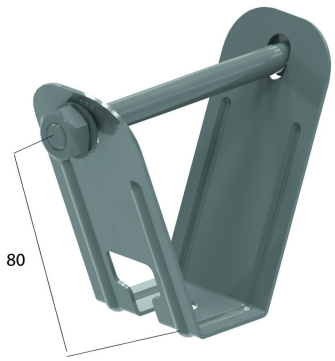

For fixing to steel roof constructions.

Max. load: 300 daN

Reference	↕ mm	↔ mm	→‖← mm	⇄ mm	kg/stk	⬡	Unit
SDBG					0,200	20	STK

Included: Bolt B10.110, nut M10 and washer RO10.