DR21.41
Supporting profile

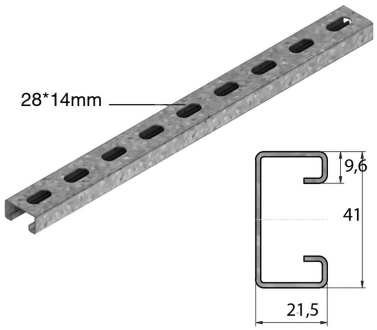

Max. load: 150 daN

Reference	↕ mm	↔ mm	→‖← mm	⇄ mm	kg/stk	⬡	Unit
DR450	21	41		450	0,500	6	STK
DR550	21	41		550	0,620	6	STK
DR650	21	41		650	0,700	6	STK

To be fixed with two threaded rods TIM10 + nut M10 + CRO10.
Always order the width of the cable tray + 50 mm.