DR15.30
Supporting profile

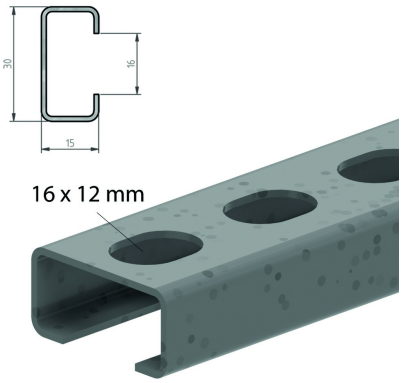

Max. load: 100 daN

Reference	↕ mm	↔ mm	→‖← mm	⇄ mm	kg/stk	⬡	Unit
DR100	15	30		100	0,060	10	STK
DR150	15	30		150	0,080	10	STK
DR200	15	30		200	0,110	10	STK
DR250	15	30		250	0,130	10	STK
DR300	15	30		300	0,160	10	STK
DR350	15	30		350	0,190	10	STK
DR15.30.2000	15	30		2000	0,600	40	M

To be fixed with two threaded rods TIM8 + nut M8 + CRO8.
Always order the width of the cable tray + 50 mm.