SS2A - SS2N
SS2 Pipe Clamp

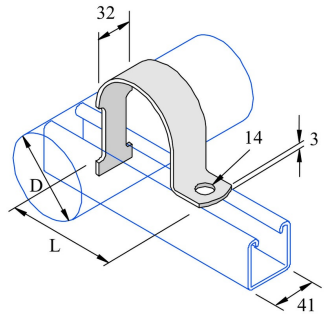

Reference	Finish	L mm	A mm	g mm	⇄ mm	D mm	kg/stk	⬡	Unit
SS2/AH	HG	66	32		66	15 - 21	0,062	20	STK
SS2/BH	HG	73	32		73	20 - 27	0,071	20	STK
SS2/CH	HG	81	32		81	25 - 34	0,086	20	STK
SS2/DH	HG	90	32		90	32 - 43	0,104	20	STK
SS2/EH	HG	96	32		96	40 - 48	0,115	10	STK
SS2/FH	HG	96	32		96	50 - 60	0,140	10	STK
SS2/GH	HG	113	32		113	65 - 76	0,172	10	STK
SS2/HH	HG	125	32		125	80 - 90	0,199	10	STK
SS2/JH	HG	137	32		137	90 - 102	0,224	10	STK
SS2/KH	HG	150	32		150	100 - 115	0,251	10	STK
SS2/MH	HG	204	32		204	150 - 168	0,357	10	STK
SS2/NH	HG	255	32		255	200 - 220	0,461	10	STK

Abbreviation:
- HG = Hot-Dip Galvanised

Legend finish
- HG = Hot-dip galvanised