SN

Sliding nut for supporting profile

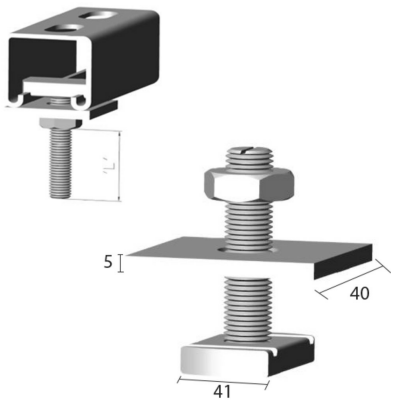

Reference	↕ mm	↔ mm	→‖← mm	⇄ mm	kg/stk	⬡	Unit
M6X30SN		35			0,068	100	STK
M8X30SN		35			0,081	100	STK
M8X40SN		35			0,084	100	STK
M8X50SN		35			0,087	100	STK
M8X60SN		35			0,090	100	STK
M8X75SN		35			0,095	100	STK
M8X100SN		35			0,103	100	STK
M10X30SN		35			0,097	100	STK
M10X40SN		35			0,102	100	STK
M10X50SN		35			0,107	100	STK
M10X60SN		35			0,112	100	STK
M10X75SN		35			0,120	100	STK
M10X100SN		35			0,132	100	STK
M12X30SN		35			0,117	100	STK
M12X40SN		35			0,124	100	STK
M12X50SN		35			0,131	100	STK
M12X60SN		35			0,139	100	STK
M12X75SN		35			0,150	100	STK
M12X100SN		35			0,168	25	STK
M16X63SN		35			0,120	100	STK
M16X102SN		35			0,170	50	STK