HDWVPIPE
Bolted bracket

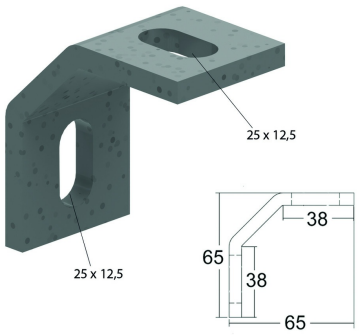

Reference	↕ mm	↔ mm	→‖← mm	⇄ mm	kg/stk	⬡	Unit
HDWVPIPE	65	65	6,5		0,190	10	STK