HDSKIPE

Hinged headplate for HDIPE80S

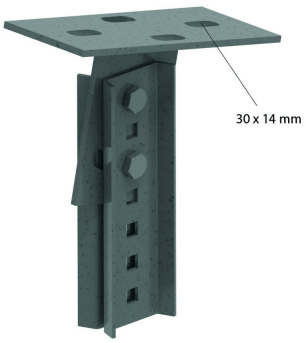

To be mounted on HDIPE80S profile, max. angle of 35°.

Max. load: 2350 daN

Reference	↕ mm	↔ mm	→‖← mm	⇄ mm	kg/stk	📦	Unit
HDSKIPE			3	191	1,670	6	STK

Included: 2x HDKPIPE, 2x bolt HDB10.30, 2x nut HDM10 and 2x HDRO10.

