HDWK
Welded bracket

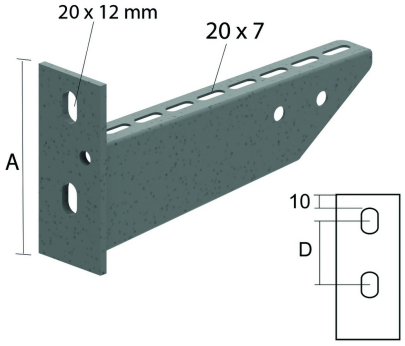

For fixing on the wall and also on the ceiling profile.

Thickness head plate: 5 mm

	Max. load (in daN)	A	D
HDWK100	120	106,5	46,5
HDWK150	230	112	52
HDWK200	340	116	56
HDWK250	450	120,5	60,5
HDWK300	320	125	65
HDWK400	430	134	74
HDWK500	390	142,5	82,5
HDWK600	350	150	90

Reference	↕ mm	↔ mm	→‖← mm	⇄ mm	kg/stk	⬢	Unit
HDWK100	106	117			0,300	12	STK
HDWK150	112	167			0,360	12	STK
HDWK200	116	217			0,430	12	STK
HDWK250	120	267			0,530	12	STK
HDWK300	125	317			0,730	12	STK
HDWK400	134	417			0,880	6	STK
HDWK500	142	517			1,299	6	STK
HDWK600	150	617			1,600	6	STK

For fixing on ceiling profiles, order the necessary fixing elements separately: two sliding nuts PNP10 and
- tapbolt B10.20 per bracket for ceiling profile HDHSLECL/HDHSLDCL.
- tapbolt B10.30 per bracket for ceiling profile HSMES/HSMD.

Max. load (in daN): uniformly distributed over complete width of cantilever brackets.