HDMBZ
Wall support

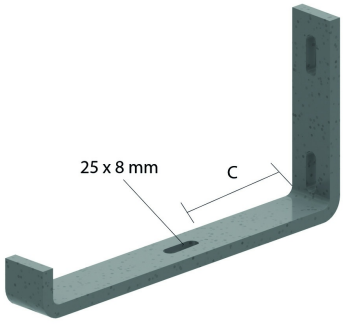

Max. load: 40 daN

	C
HDMBZ075	30
HDMBZ100	47,50
HDMBZ150	65,50
HDMBZ200	97,50

Reference	↕ mm	↔ mm	→‖← mm	⇄ mm	kg/stk	⬡	Unit
HDMBZ075	120	104			0,310	6	STK
HDMBZ100	120	125			0,350	6	STK
HDMBZ150	120	175			0,470	6	STK
HDMBZ200	120	233			0,660	6	STK