OBZ130

Open suspension bracket

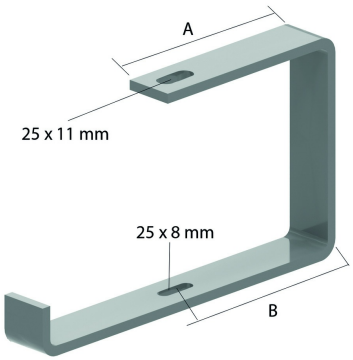

Useful for direct mounting to the ceiling or with threaded rod TIM8 or TIM10.

Article	Max. load (in daN)	A	B
OBZ130.075	80	64	42,5
OBZ130.100	40	80	59,5
OBZ130.150	50	105	84,5
OBZ130.200	30	130	109,5
OBZ130.250	50	155	134,5
OBZ130.300	40	180	159,5
OBZ130.400	30	230	209,5

Reference	↕ mm	↔ mm	→‖← mm	⇄ mm	kg/stk	📦	Unit
OBZ130.075	132	102			0,390	12	STK
OBZ130.100	132	125			0,450	12	STK
OBZ130.150	132	177			0,570	12	STK
OBZ130.200	132	227			0,670	12	STK
OBZ130.250	132	281			1,020	6	STK
OBZ130.300	132	331			1,180	6	STK
OBZ130.400	132	431			1,461	6	STK

Fixing of the cable tray by VM6.20.
Max. load (in daN): uniformly distributed over complete width of cantilever brackets.