DR15.30
Supporting profile

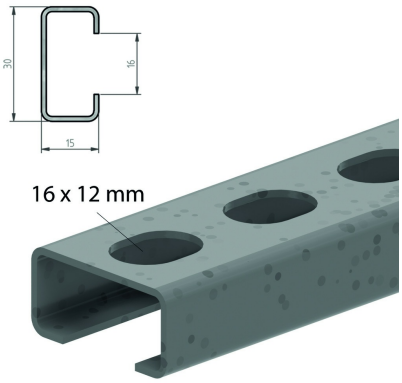

For wall and ceiling constructions

Reference	↕ mm	↔ mm	→‖← mm	⇄ mm	kg/stk	⬡	Unit
DR100	15	30		100	0,060	10	STK
DR150	15	30		150	0,080	10	STK
DR200	15	30		200	0,110	10	STK
DR250	15	30		250	0,130	10	STK
DR300	15	30		300	0,160	10	STK
DR350	15	30		350	0,190	10	STK
DR15.30.2000	15	30		2000	0,600	40	M

Max. support distance = 300 mm.
Use of cable clamps, type H.
Applicable with all DIN 4102-12 certified cables.
Fixing to the ceiling or wall with certified concrete anchors.
Distance between the anchors max. 250 mm.