KLL110
Cable ladder

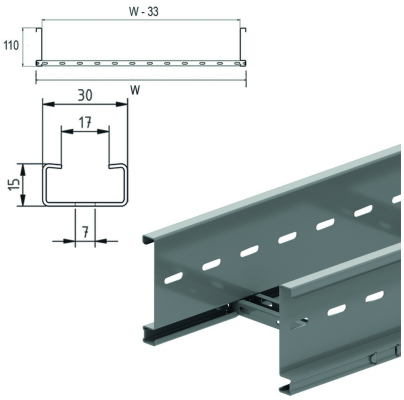

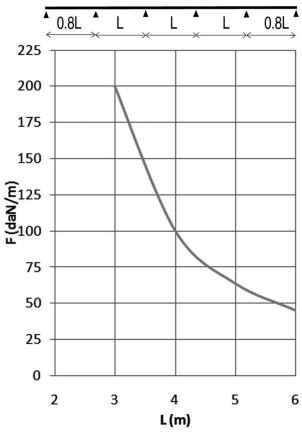

Side walls: perforated S-profile
Perforated C rungs 15x30

Usable inner height: 94 mm
Rung distance: 250 mm

Reference	↕ mm	↔ mm	→‖← mm	⇄ mm	kg/m	⬡	Unit
KLL110.150	110	150	1,25	3000	3,570	18	M
KLL110.200	110	200	1,25	3000	3,687	18	M
KLL110.300	110	300	1,25	3000	3,921	18	M
KLL110.400	110	400	1,25	3000	4,155	18	M
KLL110.450	110	450	1,25	3000	4,272	18	M
KLL110.500	110	500	1,25	3000	4,389	18	M
KLL110.600	110	600	1,25	3000	4,623	18	M
KLL110.750	110	750	1,25	3000	4,975	18	M
KLL110.800	110	800	1,25	3000	5,092	18	M
KLL110.900	110	900	1,25	3000	5,326	18	M
ZMKLL110.150	110	150	1,25	3000	3,570	18	M
ZMKLL110.200	110	200	1,25	3000	3,687	18	M
ZMKLL110.300	110	300	1,25	3000	3,921	18	M
ZMKLL110.400	110	400	1,25	3000	4,155	18	M
ZMKLL110.450	110	450	1,25	3000	4,272	18	M
ZMKLL110.500	110	500	1,25	3000	4,389	18	M
ZMKLL110.600	110	600	1,25	3000	4,623	18	M
ZMKLL110.750	110	750	1,25	3000	4,975	18	M
ZMKLL110.800	110	800	1,25	3000	5,092	18	M
ZMKLL110.900	110	900	1,25	3000	5,326	18	M

LOAD DIAGRAM
This diagram illustrates the permissible uniformly distributed horizontal loads applied to multiple supports. They comply with IEC 61537 with connection in the centre of the span and the end span = 0,8x the span.

F = max. admissible load (daN/m)
L = support distance (m)
Max. deflection (m) = L/100

CHARACTERISTICS
- lightweight
- strong
- partition (SLOS85) can be fixed to the cable ladder with a sliding nut (GM6) and pan head bolt (RB6.10)
- no further coupling holes are required if the cable ladder is cut.
- rungs are perforated to enable efficient attachment of cables.

TECHNICAL INFORMATION
Side walls are constructed from S profile with a return flange and are continuously perforated.
C-profile rungs are fixed at 250 mm intervals.
Rungs are mechanically attached to the side wall of the cable ladder.
Rungs are alternately placed with openings upwards and downwards.