SKL60
Rising cable ladder

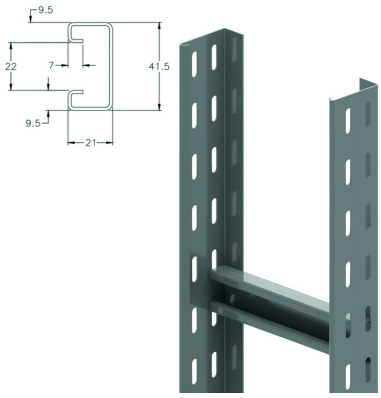

Side walls: perforated L-profile
C-rungs 41x21 mm

Usable inner height: 39 mm
Rung distance: 500 mm
Max. load: 114 kg/rung

Reference	↕ mm	↔ mm	→‖← mm	⇄ mm	kg/m	📦	Unit
SKL60.200	60	200		3000	2,430	24	M
SKL60.300	60	300		3000	2,670	24	M
SKL60.400	60	400		3000	2,930	24	M
SKL60.500	60	500		3000	3,070	24	M
SKL60.600	60	600		3000	3,330	24	M

Fix with:

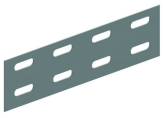

Joiner
V60.200



Toothed round head bolt / flange nut
VM