KL60
Cable ladder

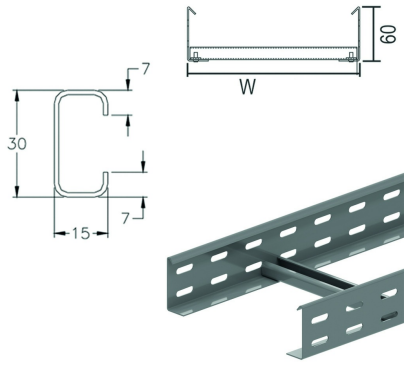

Side walls: perforated L-profile
C-rungs

Usable inner height: 45 mm
Rung distance: 300 mm

Reference	↕ mm	↔ mm	→‖← mm	⇄ mm	kg/m	📦	Unit
KL60.200	60	200		3000	2,370	24	M
KL60.300	60	300		3000	2,570	24	M
KL60.400	60	400		3000	2,770	24	M
KL60.500	60	500		3000	2,970	24	M
KL60.600	60	600		3000	3,200	24	M

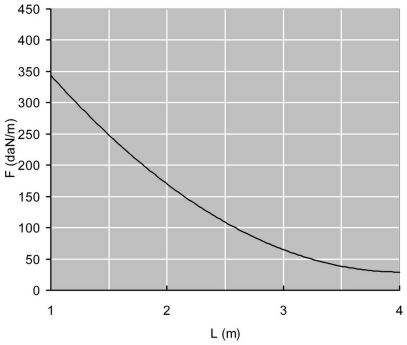

LOAD DIAGRAM
This diagram illustrates the permissible uniformly distributed horizontal loads applied to multiple supports. They comply with IEC 61537 par 10.3.3 test type III with connection to 1/5 of the span.

F = max. admissible load (daN/m)
L = support distance (m)
Max. deflection (m) = L/100

CHARACTERISTICS
- lightweight
- strong
- partition (SLOS35) can be fixed to the cable ladder by means of a sliding nut GM6 and pan head bolt (RB6.10)
- all accessories for cable tray height 60 mm can also be mounted on this KL cable ladder
- no further coupling holes are required if the cable ladder is cut.

TECHNICAL INFORMATION
Side walls are constructed from L profile with a return flange and are continuously perforated.
C-profile rungs are fixed at 300 mm intervals.
Rungs are attached to the side walls of the cable ladder by means of cold fusion. The rung openings are directed upwards.

Fix with:

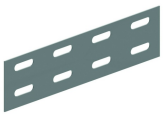

Joiner
V60.200



Toothed round head bolt / flange nut
VM