HDKSR60

Cable ladder DAVID tubular rungs

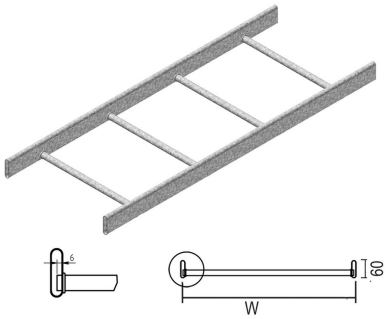

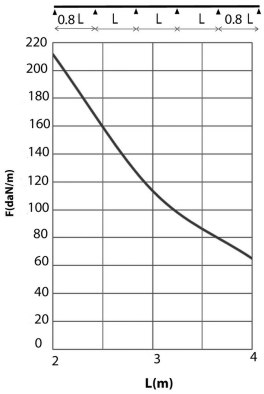

Usable inner height: 33 mm
Rung distance: 250 mm

Reference	↕ mm	↔ mm	→‖← mm	⇄ mm	kg/m	⬡	Unit
HDKSR60.200	60	200		6000	2,700	60	M
HDKSR60.300	60	300		6000	2,940	60	M
HDKSR60.400	60	400		6000	3,180	60	M
HDKSR60.500	60	500		6000	3,430	60	M
HDKSR60.600	60	600		6000	3,670	60	M

LOAD DIAGRAM

This diagram illustrates the permissible uniformly distributed horizontal loads applied to multiple supports. They comply with IEC 61537 par 10.3.3 test type III with connection to 1/5 of the span.

F = max. admissible load (daN/m)
L = support distance (m)
Max. deflection (m) = L/100

CHARACTERISTICS

- lightweight
- rounded tubular side-walls eliminate the risk of cable damage.
- side walls have closed ends.
- does not accumulate dust

TECHNICAL INFORMATION

- Side walls are constructed from tubular section 60 mm x 15 mm.
- Ø 19 mm tubular rungs are fixed at 250 mm intervals.
- rungs are welded to the side wall of the cable ladder.