HDVSIE

Floor support for HDKLIE

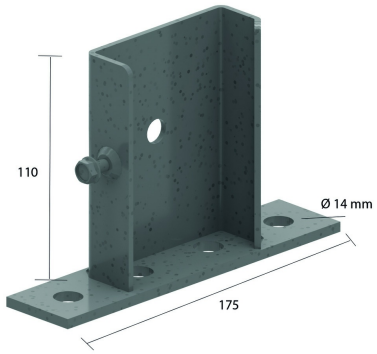

To mount the cable ladder vertically on the floor.
Slides over the side wall.

Reference	↕ mm	↔ mm	→‖← mm	⇄ mm	kg/stk	⬡	Unit
HDVSIE	115	88			0,640	6	STK

Premounted with tapbolt 6x12.